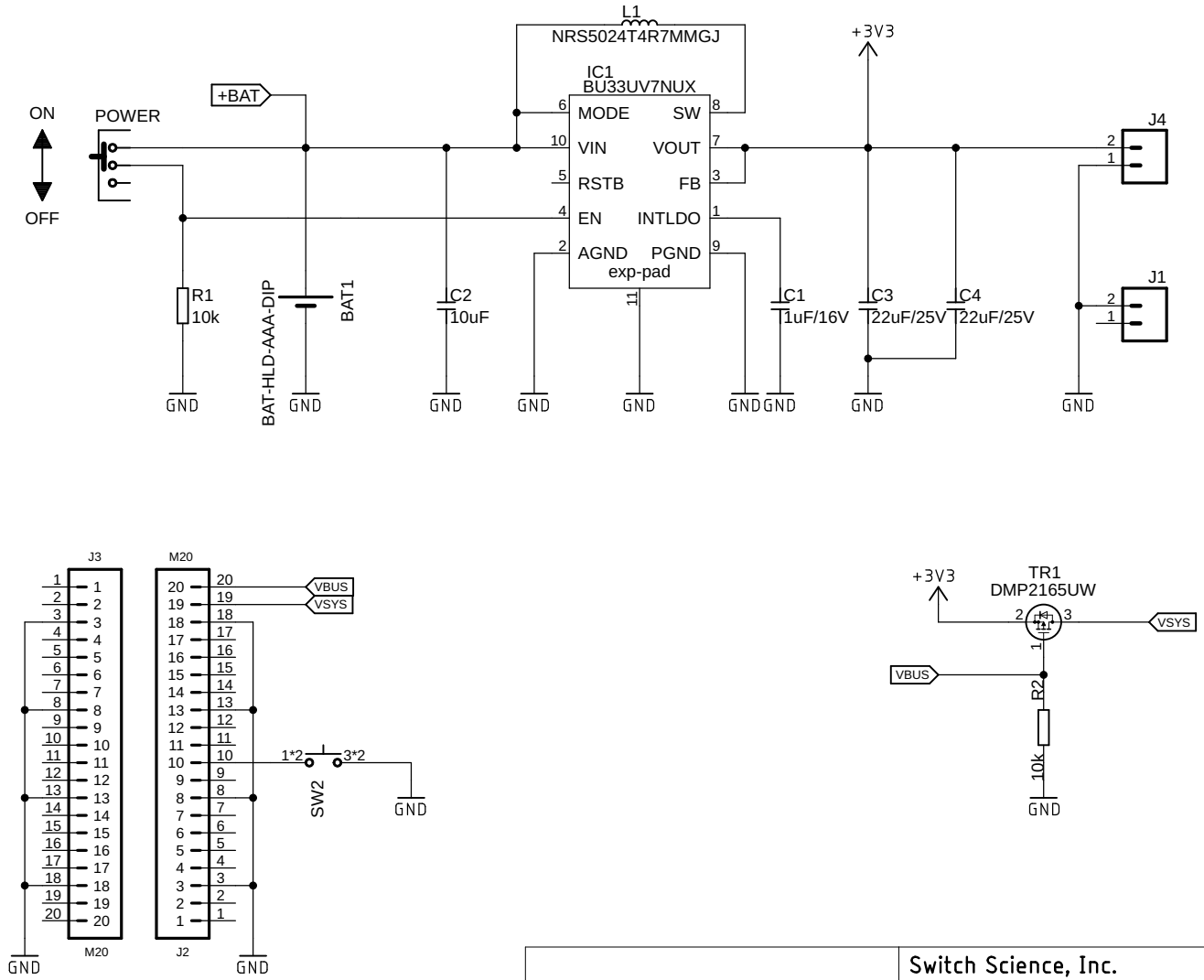

Switch Science, Inc.	
AAA_Battery_Module_for_RPi_Pico	
2021/09/03 9:49	
Sheet: 1/1	