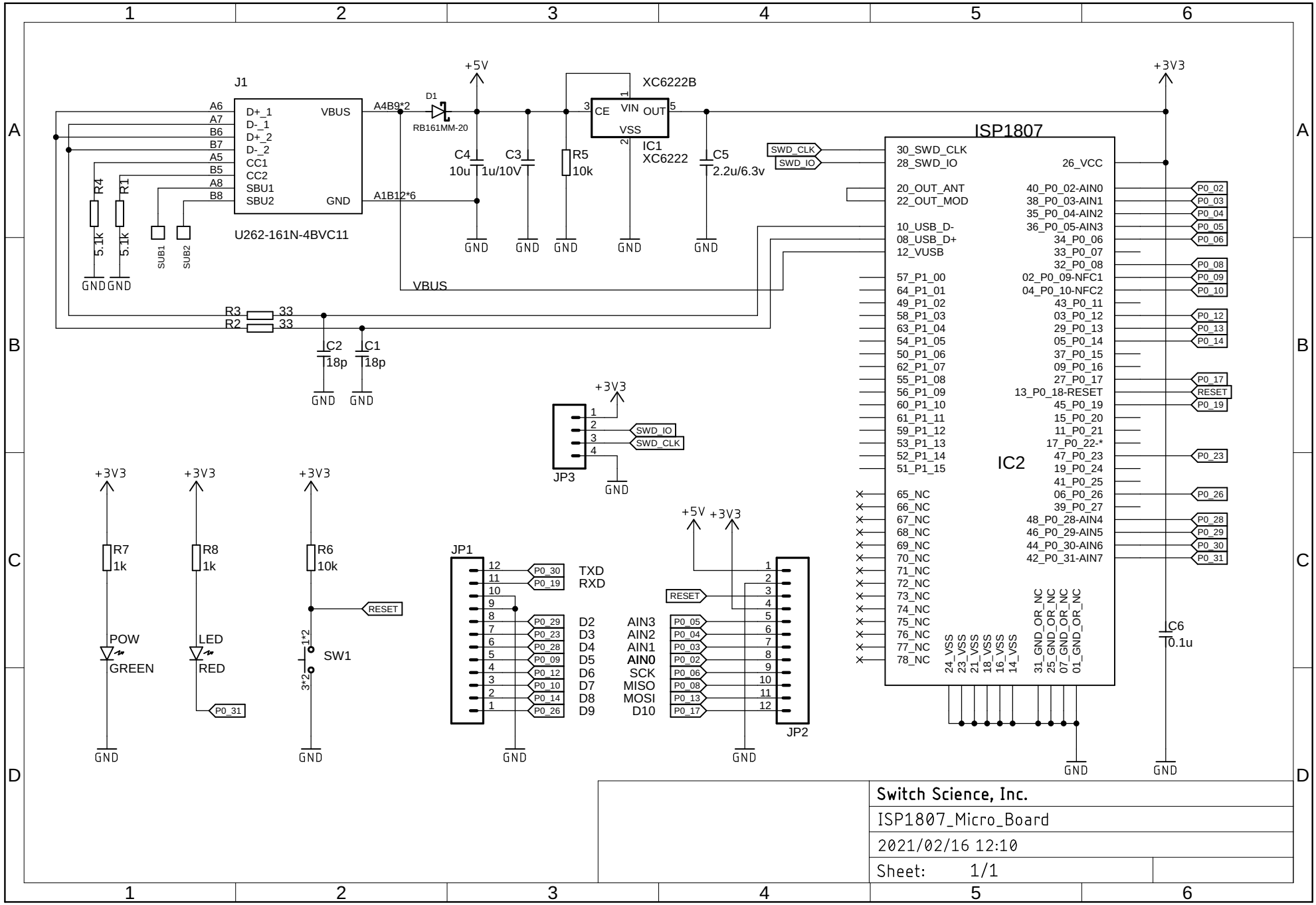
J1
U262-161N-4BVC11
D+_1
D-_1
D+_2
D-_2
CC1
CC2
SBU1
SBU2
VBUS
GND
A6
A7
B6
B7
A5
B5
A8
B8
A4B9*2
A1B12*6
D1
RB161MM-20
+5V
+3V3
XC6222B
IC1
XC6222
CE
VIN
OUT
VSS
C4
10u
C3
1u/10V
R5
10k
C5
2.2u/6.3v
R4
5.1k
R1
5.1k
SUB1
SUB2
R3
33
R2
33
C2
18p
C1
18p
VBUS
SWD_CLK
SWD_IO
ISP1807
IC2
30_SWD_CLK
28_SWD_IO
20_OUT_ANT
22_OUT_MOD
10_USB_D-
08_USB_D+
12_VUSB
57_P1_00
64_P1_01
49_P1_02
58_P1_03
63_P1_04
54_P1_05
50_P1_06
62_P1_07
55_P1_08
56_P1_09
60_P1_10
61_P1_11
59_P1_12
53_P1_13
52_P1_14
51_P1_15
65_NC
66_NC
67_NC
68_NC
69_NC
70_NC
71_NC
72_NC
73_NC
74_NC
75_NC
76_NC
77_NC
78_NC
26_VCC
40_P0_02-AIN0
38_P0_03-AIN1
35_P0_04-AIN2
36_P0_05-AIN3
34_P0_06
33_P0_07
32_P0_08
02_P0_09-NFC1
04_P0_10-NFC2
43_P0_11
03_P0_12
29_P0_13
05_P0_14
37_P0_15
09_P0_16
27_P0_17
13_P0_18-RESET
45_P0_19
15_P0_20
11_P0_21
17_P0_22-*
47_P0_23
19_P0_24
41_P0_25
06_P0_26
39_P0_27
48_P0_28-AIN4
46_P0_29-AIN5
44_P0_30-AIN6
42_P0_31-AIN7
24_VSS
23_VSS
21_VSS
18_VSS
16_VSS
14_VSS
31_GND_OR_NC
25_GND_OR_NC
07_GND_OR_NC
01_GND_OR_NC
C6
0.1u
P0_02
P0_03
P0_04
P0_05
P0_06
P0_08
P0_09
P0_10
P0_12
P0_13
P0_14
P0_17
RESET
P0_19
P0_23
P0_26
P0_28
P0_29
P0_30
P0_31
JP3
SWD_IO
SWD_CLK
R7
1k
POW
GREEN
R8
1k
LED
RED
R6
10k
SW1
1*2
3*2
JP1
TXD
RXD
D2
D3
D4
D5
D6
D7
D8
D9
JP2
AIN3
AIN2
AIN1
AIN0
SCK
MISO
MOSI
D10
P0_05
P0_04
P0_03
P0_02
P0_06
P0_08
P0_13
P0_17
Switch Science, Inc.
ISP1807_Micro_Board
2021/02/16 12:10
Sheet: 1/1